G275QS | Canopy Set

JCB GENERATORS IRELAND

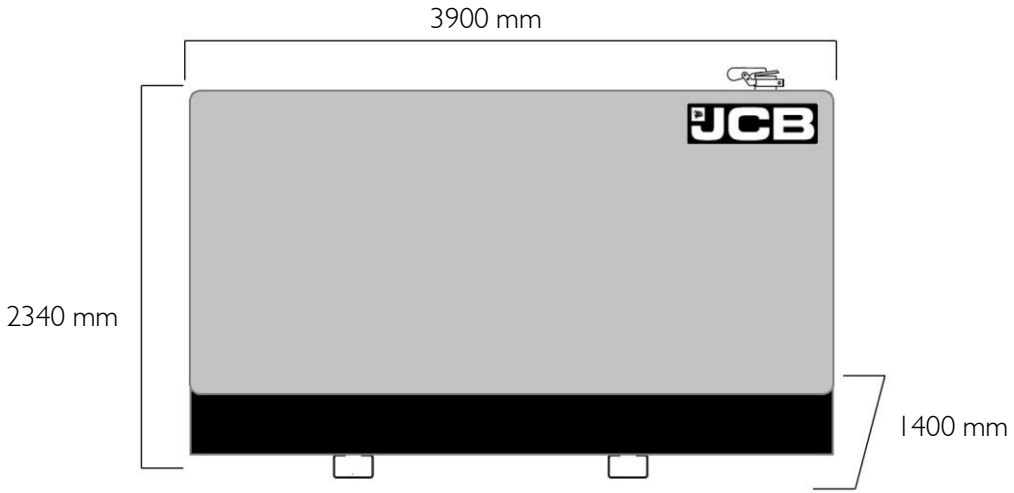

DIESEL GENERATOR	Fuel Optimised

ELECTRICAL

			Prime		Standby				
Frequency (Hz)	Phases	Voltage (V)	kVA	kW	kVA	kW	Power Factor	Rated Speed (RPM)	Alternator
50	3	400/230V	250	200	275	220	0.8	1500	ECO38 1L4A
60	3	480/277V	282	225	313	250	0.8	1800	ECO38 1L4A
60	3	380/220V	282	225	313	250	0.8	1800	ECO38 1L4A-D
60	3	208/120V	282	225	313	250	0.8	1800	ECO38 1L4A
60	3	220/127V	282	225	313	250	0.8	1800	ECO38 1L4A

ALL RATINGS ARE TO STANDARD REFERENCE CONDITIONS

PRIME: Available for an unlimited number of hours per year in a variable load application. Variable load should not exceed a 70% average of the Prime Power rating during any operating period of 250 hours. The total operating time at 100% Prime Power shall not exceed 500 hours per year. A 10% overload capability is available for a period of 1 hour within a 12-hour period of operation. Total operating time at the 10% overload power shall not exceed 25 hours per year.

STANDBY: Applicable for supplying emergency power for the duration of the utility power outage. No overload capability is available for this rating. This rating should be applied where reliable utility power is available. A Standby rated engine should be sized for a maximum of an 80% average load factor and 200 hours of operation per year. This includes less than 25 hours per year at the Standby Power rating

G275QS | Canopy Set

JCB GENERATORS IRELAND

ENGINE

1500 RPM		
Output Rating (PRP)	kW	258
Output Rating (Standby)	kW	300
1800 RPM		
Output Rating (PRP)	kW	296
Output Rating (Standby)	kW	344
Manufacturer and Model		Cummins QSL9-G5
Fuel		Diesel
Injection		Direct
Aspiration		Turbo Charged and Charge Air Cooled
Cylinders		6 - Inline
Bore and Stroke	mm	114 x 145
Displacement	L	8.80
Cooling		Water
Engine Oil Specification		ACEA E3. E4, E5 or E7
Compression Ratio		16.8 : 1
Engine Oil Capacity	L	26.50
Coolant Capacity	L	36.00
Governor		Electronic
Air Filter		Dry
Engine Oil Consumption	100% Load	0.2 g/kWh

FUEL SYSTEM

Diesel Specification		EN590

FUEL CONSUMPTION

100% Load Prime	L/h	50Hz	51.6
75% Load Prime	L/h		38.9
50% Load Prime	L/h		27.4
100% Load Standby	L/h		57.6
100% Load Prime	L/h	60Hz	60.1
75% Load Prime	L/h		42.2
50% Load Prime	L/h		32.5
100% Load Standby	L/h		66.7

EXHAUST SYSTEM

Maximum Temperature 100% Standby	°C	50Hz	560
Exhaust Gas Flow 100% Standby	L/s		880
Maximum Allowed Back Pressure	mbar		101
Maximum Temperature 100% Standby	°C	60Hz	580
Exhaust Gas Flow 100% Standby	L/s		1080
Maximum Allowed Back Pressure	mbar		101

AIR SYSTEM

Intake Air Flow 100% Standby	m^3/h	50Hz	1224
Total Cooling Air Flow 100% Standby	m^3/s		6.1
Alternator Fan Airflow	m^3/s		0.53
Intake Air Flow 100% Standby	m^3/h	60Hz	1476
Total Cooling Air Flow 100% Standby	m^3/s		7.8
Alternator Fan Airflow	m^3/s		0.65

G275QS | Canopy Set

JCB GENERATORS IRELAND

ALTERNATOR

Poles	4
Winding Connections	Series Star / Parallel Star*
Insulation	Class H
Enclosure	IP23
Exciter System	MAUX Excitation
Voltage Regulator	AVR (electronic)
Steady State Voltage Regulation	+/- 1.0%
Bearing	Single bearing
Coupling	Flexible disc
Cooling	Direct drive centrifugal blower fan
Coating	Grey Winding Protection

* depending on voltage selection

STARTING SYSTEM

Auxiliary Voltage	V	24
Number of Batteries		2

BATTERY FEATURES

Battery Isolator	Δ
Battery Type	Lead Acid (Δ)
Battery Charger	Δ

Standard: ● Not Available: x Optional: Δ

ELECTRICAL FEATURES

AVR DSR	●
Winding Protection – Grey Enhanced	●
MAUX	●
PMG	Δ
Anti-Condensation Heater	Δ
3 Pole Moulded Case Circuit Breaker (with integrated busbar)	●
4 Pole Moulded Case Circuit Breaker (with integrated busbar)	Δ
Earth Leakage Protection (Shunt Trip)	Δ
Synchronisation	Δ
Preparation for Earth Spike	●
Emergency Stop Button	●

Standard: ● Not Available: x Optional: Δ

CANOPY FEATURES

Lockable Maintenance Access Doors	●
Control Panel Viewing Window	●
Yellow Paint	●
Alternate Colour	Δ
Socket Box	x
External Emergency Stop Button	●
Door Stays	●

Standard: ● Not Available: x Optional: Δ

G275QS | Canopy Set

JCB GENERATORS IRELAND

MECHANICAL FEATURES

Cooling Pack	●
Air Filter	●
Mechanical Governor	x
Electronic Governor	●
Radiator Guards	●
Hot Component Guards	●
Water Jacket Heater	Δ
Fuel/Water Pre Filter	●
Manual Oil Drain Pump	Δ
3 Way Fuel Valve and Coupling Nest	Δ
Fork Pockets	Δ
Single Lift Point	Δ
Bunding	●

Standard: ● Not Available: x Optional: Δ

SOUND PRESSURE

LpA (7m)	50Hz	dB(A)	68.5
LpA (7m)	60Hz	dB(A)	70.8

FUEL TANK

	Material	Capacity (L)
Canopy Set	Steel	470

MOBILE EMISSIONS REGULATIONS

Depending on the territory, specific emissions legislation applies to generators used in mobile applications. Any generator not permanently installed, for the life of the product, must be considered as mobile equipment and may be subject to emissions legislation requirements. Please consult your local dealer for clarification.

JCB COMMUNICATION AND CONTROL

DSE 4520	●
DSE 7310	Δ
DSE 8610 Synchronising Controller & Motorised Circuit Breaker	Δ
Low Oil Pressure Shutdown	●
High Engine Temperature Shutdown	●
Low Coolant Level Alarm	●
Low Fuel Level Alarm	●
JCB LiveLink	●

Standard: ● Not Available: x Optional: Δ

WEIGHT AND DIMENSIONS

Length	mm	3900
Width	mm	1400
Height	mm	2340
Shipping Volume (sea ready)	m^3	12.78
Weight*	Kg	4350

**Standard build with all fluids except fuel*

REFERENCE STANDARDS

JCB Generators are CE certified and conform to the following Directives (subject to a country requiring such standard):

- EN 12100, EN13857, EN60204
- 2006/42/CE Machinery safety
- 2014/35/EU Low voltage
- 2014/30/EU Electromagnetic compatibility
- 2000/14/EC Sound Power Level (amended by 2005/88/EC)
- 97/68/EC Emissions(amended by 2002/88/EC & 2004/26/EC)
- Power according to ISO 8528 and ISO 3046
- Ambient reference conditions 1000mbar, 25°C, 30% relative humidity ISO3046

Information based on standard specification equipment unless otherwise stated.